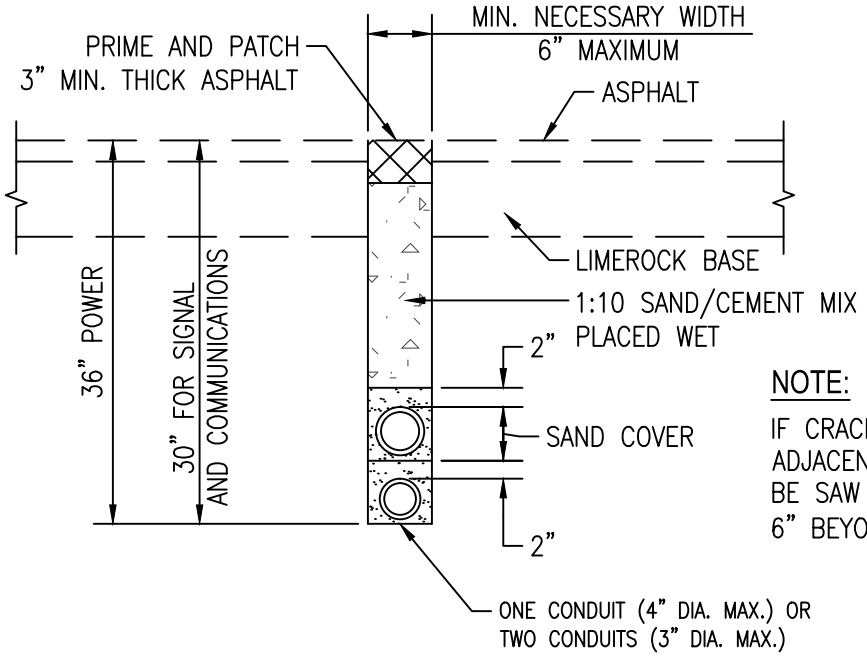

NOTE:

IF CRACKS APPEAR IN ASPHALT ADJACENT TO CUT, EDGES MUST BE SAW CUT TO A STRAIGHT LINE 6" BEYOND THE FURTHEST CRACK.

DETAIL "A"
MINIMUM UTILITY CROSSING OF ROADWAY

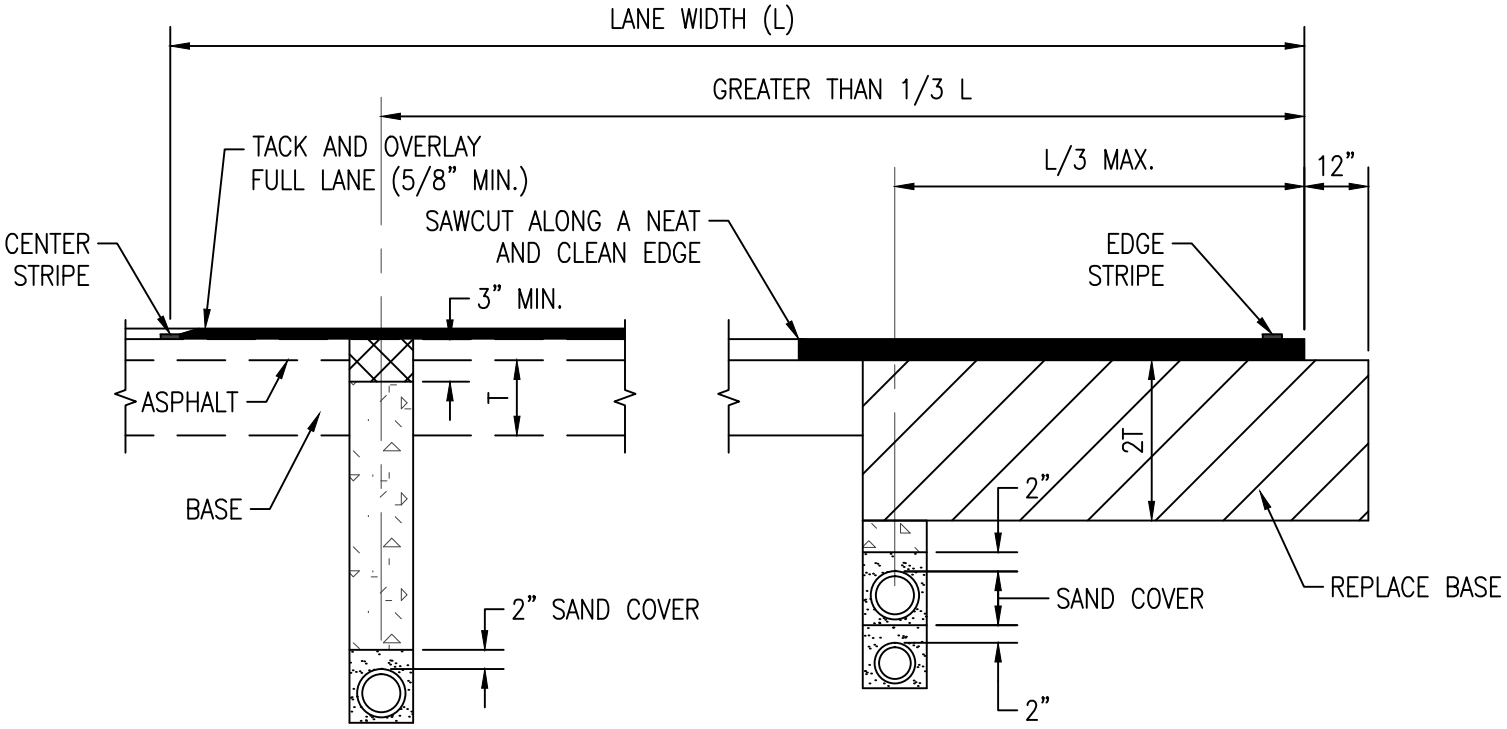

DETAIL "B" DETAIL "C"

MINIMUM PARALLEL UTILITY INSTALLATION

NOTE:

DETAILS NOT SHOWN SHALL BE AS PER DETAIL "A" PROCEDURE SHALL BE PER APPLICABLE PROVISIONS OF DETAIL R-25

RE: B.C.P.W.D. PLATE No.8

CITY OF PEMBROKE PINES ENGINEERING/UTILITIES DIVISION		STANDARD ROAD DETAIL		
APPROVED: J.M.	REVISED:	FLEXIBLE PAVEMENT RESTORATION DIRECT BURIAL CABLE OR CONDUIT		R-36
DATE: 11/05/99				