NOTES:

1. CUL-DE-SAC STREETS NOT TO EXCEED 400' IN LENGTH.
2. MAINTAIN MIN. 0.3% SLOPE ALONG GUTTER FOR PROPER DRAINAGE 0.5% RECOMMENDED.
3. SECTION B-B SHOWN IN DETAIL R-11.

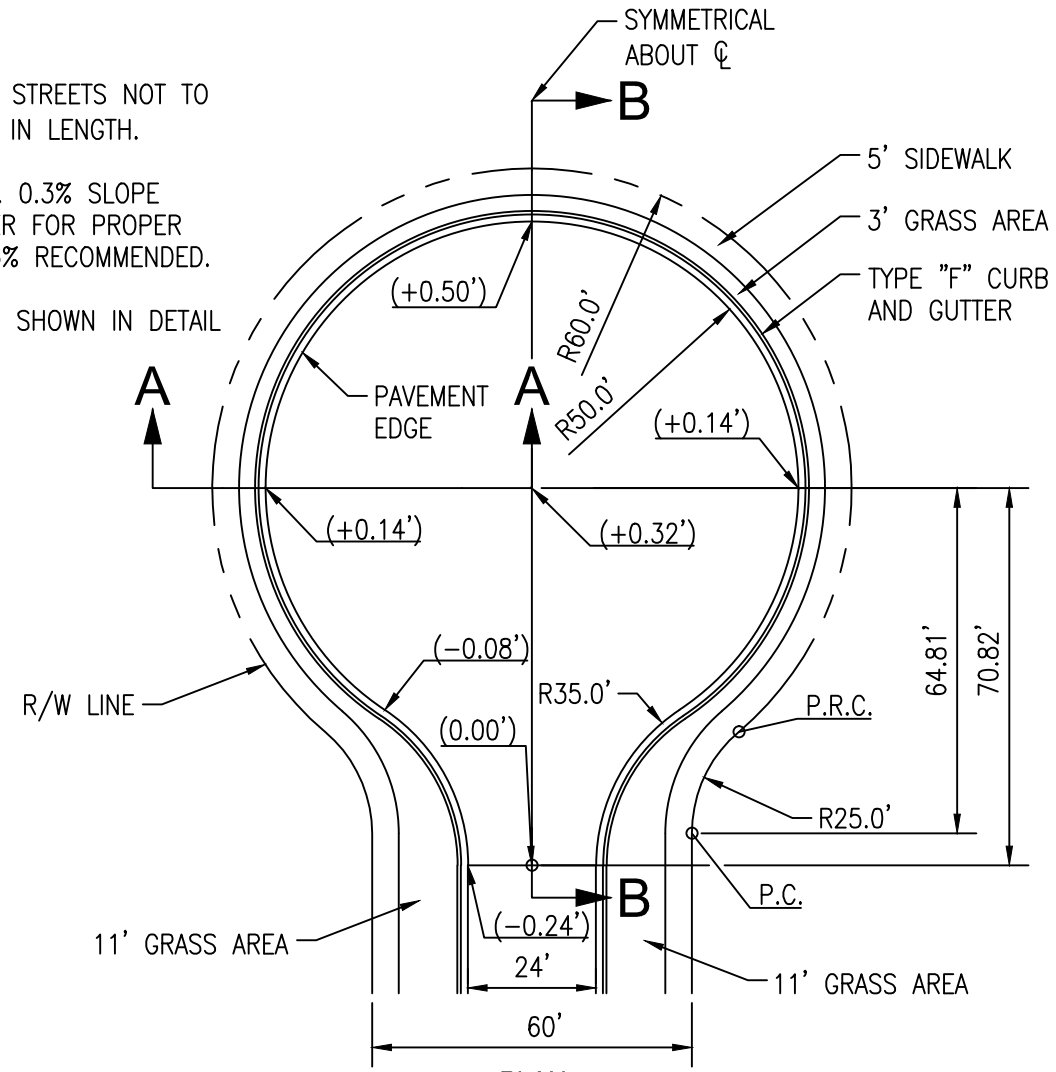

PLAN

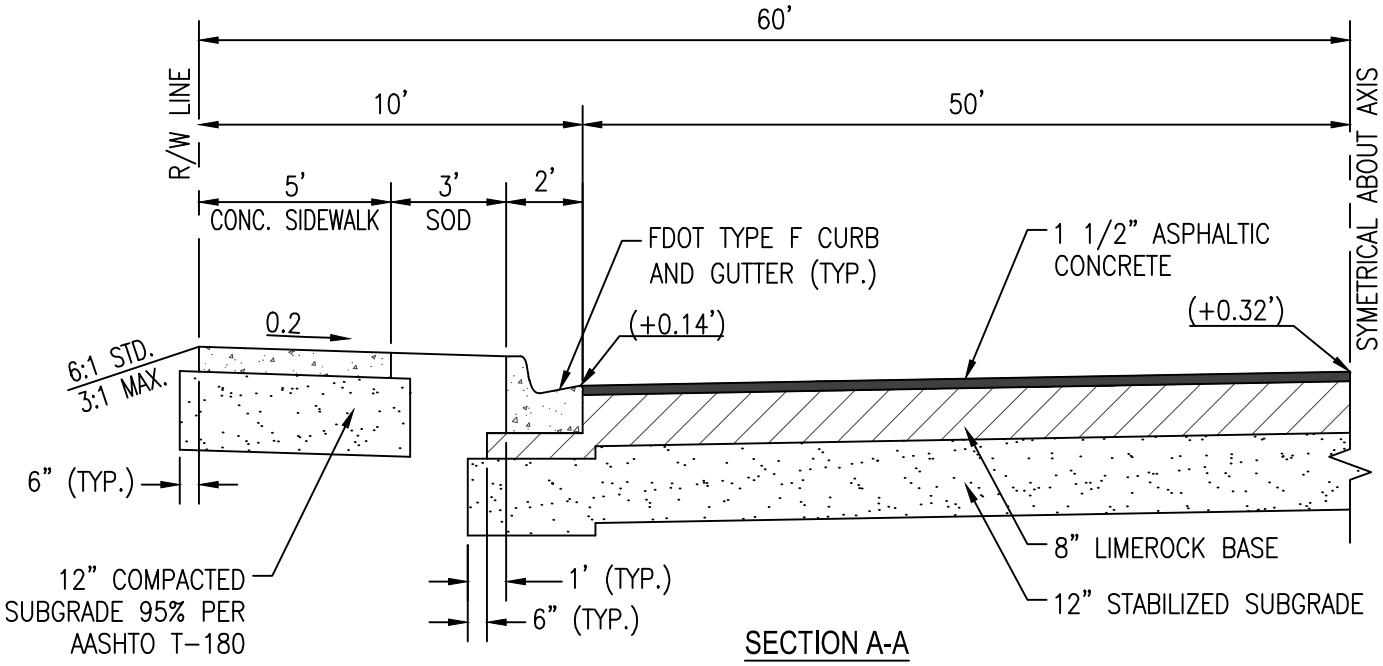

SECTION A-A

CITY OF PEMBROKE PINES ENGINEERING/UTILITIES DIVISION		STANDARD ROAD DETAIL		
APPROVED: J.M.	REVISED:	CUL-DE-SAC (60' R/W) COMMERCIAL AND INDUSTRIAL		R-10
DATE: 11/05/99				